Cambridge International A Level

Cambridge International Examinations
Cambridge International Advanced Level

CANDIDATE NAME

CENTRE NUMBER | | | | | |

CANDIDATE NUMBER | | | | |

6106210292

PHYSICS **9702/42**

Paper 4 A2 Structured Questions **May/June 2014**

2 hours

Candidates answer on the Question Paper.

No Additional Materials are required.

READ THESE INSTRUCTIONS FIRST

Write your Centre number, candidate number and name on all the work you hand in.
Write in dark blue or black pen.
You may use an HB pencil for any diagrams or graphs.
Do not use staples, paper clips, glue or correction fluid.
DO **NOT** WRITE IN ANY BARCODES.

Answer **all** questions.

Electronic calculators may be used.
You may lose marks if you do not show your working or if you do not use appropriate units.

At the end of the examination, fasten all your work securely together.
The number of marks is given in brackets [ ] at the end of each question or part question.

For Examiner's Use	
1	
2	
3	
4	
5	
6	
7	
8	
9	
10	
11	
12	
Total	

This document consists of **22** printed pages and **2** blank pages.

DC (NF/CGW) 77047/2
© UCLES 2014

Data

speed of light in free space, $c = 3.00 \times 10^{8}\ \text{m s}^{-1}$

permeability of free space, $\mu_0 = 4\pi \times 10^{-7}\ \text{H m}^{-1}$

permittivity of free space, $\varepsilon_0 = 8.85 \times 10^{-12}\ \text{F m}^{-1}$

$$\left(\frac{1}{4\pi\varepsilon_0} = 8.99 \cdot\ 10^{9}\ \text{m F}^{-1}\right)$$

elementary charge, $e = 1.60 \times 10^{-19}\ \text{C}$

the Planck constant, $h = 6.63 \times 10^{-34}\ \text{J s}$

unified atomic mass constant, $u = 1.66 \times 10^{-27}\ \text{kg}$

rest mass of electron, $m_e = 9.11 \times 10^{-31}\ \text{kg}$

rest mass of proton, $m_p = 1.67 \times 10^{-27}\ \text{kg}$

molar gas constant, $R = 8.31\ \text{J K}^{-1}\ \text{mol}^{-1}$

the Avogadro constant, $N_A = 6.02 \times 10^{23}\ \text{mol}^{-1}$

the Boltzmann constant, $k = 1.38 \times 10^{-23}\ \text{J K}^{-1}$

gravitational constant, $G = 6.67 \times 10^{-11}\ \text{N m}^2\ \text{kg}^{-2}$

acceleration of free fall, $g = 9.81\ \text{m s}^{-2}$

© UCLES 2014

Formulae

uniformly accelerated motion, $s = ut + \frac{1}{2}at^2$
$v^2 = u^2 + 2as$

work done on/by a gas, $W = p\Delta V$

gravitational potential, $\phi = -\frac{Gm}{r}$

hydrostatic pressure, $p = \rho gh$

pressure of an ideal gas, $p = \frac{1}{3}\frac{Nm}{V}\langle c^2 \rangle$

simple harmonic motion, $a = -\omega^2 x$

velocity of particle in s.h.m., $v = v_0 \cos \omega t$
$v = \pm \omega \sqrt{(x_0^2 - x^2)}$

electric potential, $V = \frac{Q}{4\pi\varepsilon_0 r}$

capacitors in series, $1/C = 1/C_1 + 1/C_2 + \ldots$

capacitors in parallel, $C = C_1 + C_2 + \ldots$

energy of charged capacitor, $W = \frac{1}{2}QV$

resistors in series, $R = R_1 + R_2 + \ldots$

resistors in parallel, $1/R = 1/R_1 + 1/R_2 + \ldots$

alternating current/voltage, $x = x_0 \sin \omega t$

radioactive decay, $x = x_0 \exp(-\lambda t)$

decay constant, $\lambda = \frac{0.693}{t_{\frac{1}{2}}}$

© UCLES 2014

[Turn over

Section A

Answer **all** the questions in the spaces provided.

1 The mass M of a spherical planet may be assumed to be a point mass at the centre of the planet.

(a) A stone, travelling at speed v, is in a circular orbit of radius r about the planet, as illustrated in Fig. 1.1.

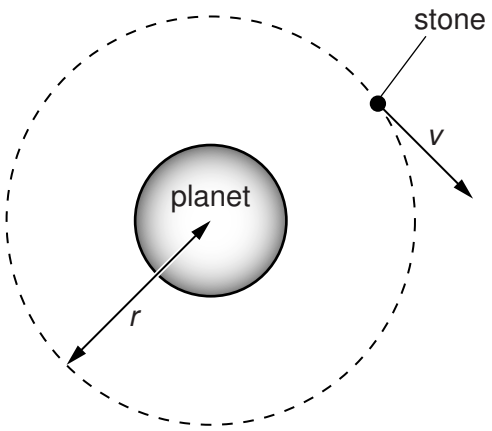

Fig. 1.1

Show that the speed v is given by the expression

$$v = \sqrt{\left(\frac{GM}{r}\right)}$$

where G is the gravitational constant.
Explain your working.

[2]

(b) A second stone, initially at rest at infinity, travels towards the planet, as illustrated in Fig. 1.2.

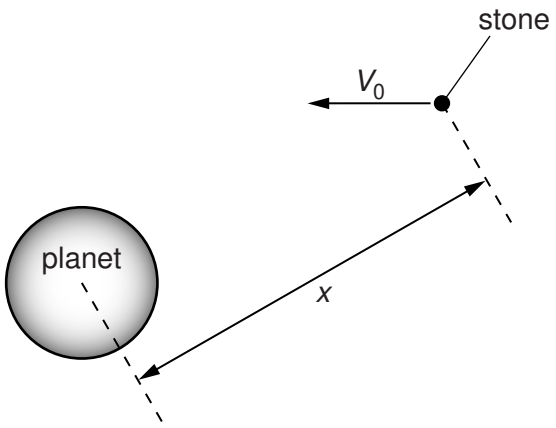

Fig. 1.2 (not to scale)

The stone does not hit the surface of the planet.

(i) Determine, in terms of the gravitational constant G and the mass M of the planet, the speed V_0 of the stone at a distance x from the centre of the planet. Explain your working. You may assume that the gravitational attraction on the stone is due only to the planet.

[3]

(ii) Use your answer in **(i)** and the expression in **(a)** to explain whether this stone could enter a circular orbit about the planet.

.....

.....

.....

..... [2]

2 A constant mass of an ideal gas has a volume of $3.49 \times 10^3\,cm^3$ at a temperature of 21.0 °C. When the gas is heated, 565 J of thermal energy causes it to expand to a volume of $3.87 \times 10^3\,cm^3$ at 53.0 °C. This is illustrated in Fig. 2.1.

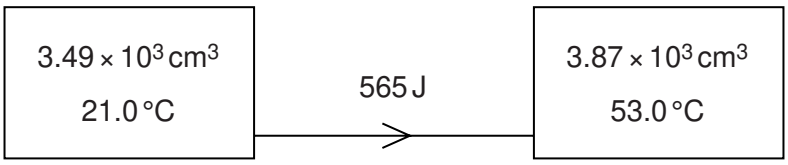

Fig. 2.1

(a) Show that the initial and final pressures of the gas are equal.

[2]

(b) The pressure of the gas is 4.20×10^5 Pa.

For this heating of the gas,

(i) calculate the work done by the gas,

work done = ... J [2]

© UCLES 2014

(ii) use the first law of thermodynamics and your answer in **(i)** to determine the change in internal energy of the gas.

change in internal energy = ... J [2]

(c) Explain why the change in kinetic energy of the molecules of this ideal gas is equal to the change in internal energy.

.....

.....

.....

..... [3]

3 A microwave cooker uses electromagnetic waves of frequency 2450 MHz.
The microwaves warm the food in the cooker by causing water molecules in the food to oscillate with a large amplitude at the frequency of the microwaves.

(a) State the name given to this phenomenon.

..... [1]

(b) The effective microwave power of the cooker is 750 W.
The temperature of a mass of 280 g of water rises from 25 °C to 98 °C in a time of 2.0 minutes.

Calculate a value for the specific heat capacity of the water.

specific heat capacity = ... $J\,kg^{-1}\,K^{-1}$ [3]

(c) The value of the specific heat capacity determined from the data in **(b)** is greater than the accepted value.
A student gives as the reason for this difference: 'heat lost to the surroundings'.

Suggest, in more detail than that given by the student, a possible reason for the difference.

.....

..... [1]

© UCLES 2014

4 A helium nucleus contains two protons.

In a model of the helium nucleus, each proton is considered to be a charged point mass. The separation of these point masses is assumed to be 2.0×10^{-15} m.

(a) For the two protons in this model, calculate

(i) the electrostatic force,

electrostatic force = ... N [2]

(ii) the gravitational force.

gravitational force = ... N [2]

(b) Using your answers in **(a)**, suggest why

(i) there must be some other force between the protons in the nucleus,

.....

.....

.....

..... [3]

(ii) this additional force must have a short range.

.....

.....

..... [2]

5 A Hall probe is placed a distance d from a long straight current-carrying wire, as illustrated in Fig. 5.1.

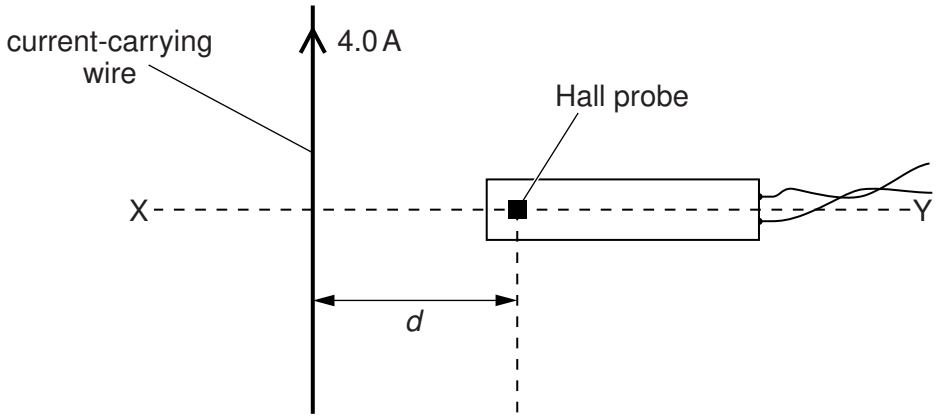

Fig. 5.1

The direct current in the wire is 4.0 A. Line XY is normal to the wire.

The Hall probe is rotated about the line XY to the position where the reading V_H of the Hall probe is maximum.

(a) The Hall probe is now moved away from the wire, along the line XY.
On the axes of Fig. 5.2, sketch a graph to show the variation of the Hall voltage V_H with distance x of the probe from the wire. Numerical values are not required on your sketch.

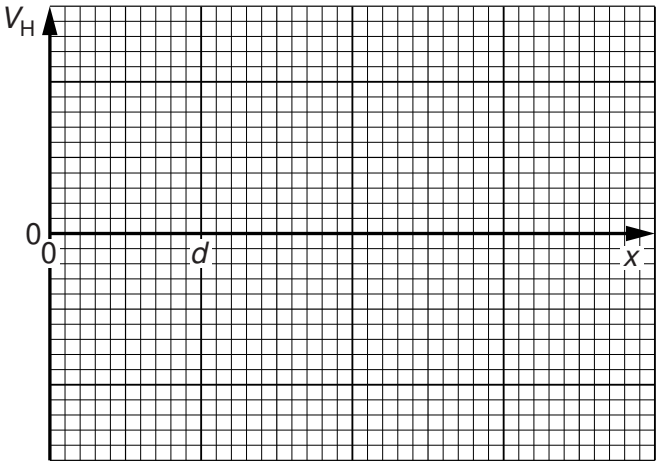

Fig. 5.2

[2]

(b) The Hall probe is now returned to its original position, a distance *d* from the wire.
At this point, the magnetic flux density due to the current in the wire is proportional to the current.

For a direct current of 4.0 A in the wire, the reading of the Hall probe is 3.5 mV.
The direct current is now replaced by an alternating current of root-mean-square (r.m.s.) value 4.0 A. The period of this alternating current is *T*.

On the axes of Fig. 5.3, sketch the variation with time *t* of the reading of the Hall voltage V_H for two cycles of the alternating current. Give numerical values for V_H, where appropriate.

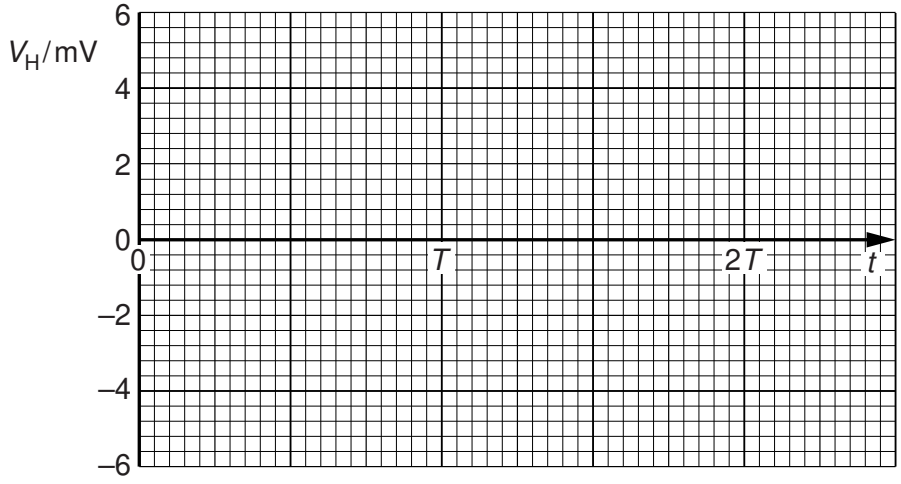

Fig. 5.3

[3]

(c) A student suggests that the Hall probe in **(a)** is replaced with a small coil connected in series with a millivoltmeter. The constant current in the wire is 4.0 A.
In order to obtain data to plot a graph showing the variation with distance *x* of the magnetic flux density, the student suggests that readings of the millivoltmeter are taken when the coil is held in position at different values of *x.*

Comment on this suggestion.

.....

.....

.....

..... [2]

© UCLES 2014

6 **(a)** Explain the use of a uniform electric field and a uniform magnetic field for the selection of the velocity of a charged particle. You may draw a diagram if you wish.

.....

.....

.....

..... [3]

(b) Ions, all of the same isotope, are travelling in a vacuum with a speed of $9.6 \times 10^4\,m\,s^{-1}$. The ions are incident normally on a uniform magnetic field of flux density 640 mT. The ions follow semicircular paths A and B before reaching a detector, as shown in Fig. 6.1.

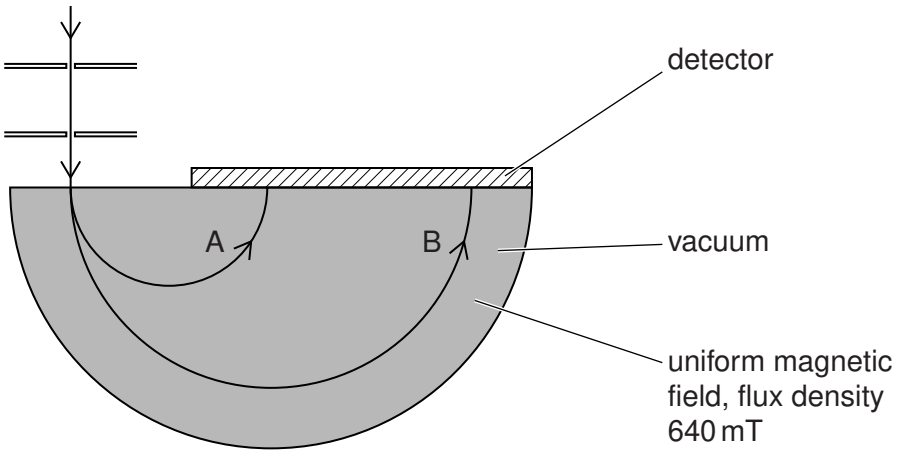

Fig. 6.1

Data for the diameters of the paths are shown in Fig. 6.2.

path	diameter / cm
A	6.2
B	12.4

Fig. 6.2

The ions in path B each have charge $+1.6 \times 10^{-19}\,C$.

(i) Determine the mass, in u, of the ions in path B.

mass = ... u [4]

(ii) Suggest and explain quantitatively a reason for the difference in radii of the paths A and B of the ions.

.....

.....

.....

..... [3]

7 **(a)** Define the *radian*.

.....

.....

..... [2]

(b) A telescope gives a clear view of a distant object when the angular displacement between the edges of the object is at least 9.7×10^{-6} rad.

(i) The Moon is approximately 3.8×10^{5} km from Earth.
Estimate the minimum diameter of a circular crater on the Moon's surface that can be seen using the telescope.

diameter = ... km [2]

(ii) Suggest why craters of the same diameter as that calculated in **(i)** but on the surface of Mars are not visible using this telescope.

.....

.....

..... [2]

© UCLES 2014

8 Light of wavelength 590 nm is incident normally on a surface, as illustrated in Fig. 8.1.

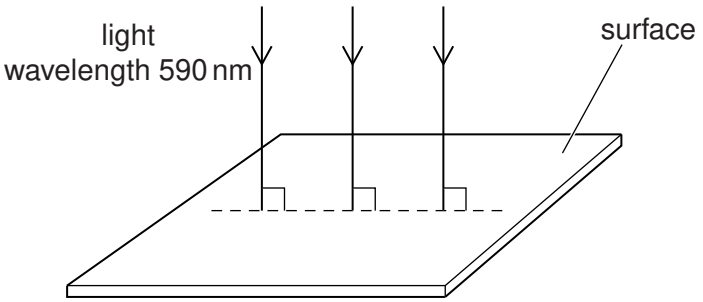

Fig. 8.1

The power of the light is 3.2 mW. The light is completely absorbed by the surface.

(a) Calculate the number of photons incident on the surface in 1.0 s.

number = ... [3]

(b) Use your answer in **(a)** to determine

(i) the total momentum of the photons arriving at the surface in 1.0 s,

momentum = ... $kg\,m\,s^{-1}$ [3]

(ii) the force exerted on the surface by the light.

force = ... N [1]

9 Some water becomes contaminated with radioactive iodine-131 ($^{131}_{53}\mathrm{I}$).
The activity of the iodine-131 in 1.0 kg of this water is 460 Bq.
The half-life of iodine-131 is 8.1 days.

(a) Define radioactive *half-life.*

.....

.....

..... [2]

(b) **(i)** Calculate the number of iodine-131 atoms in 1.0 kg of this water.

number = ... [3]

(ii) An amount of 1.0 mol of water has a mass of 18 g.

Calculate the ratio

$$\frac{\text{number of molecules of water in 1.0 kg of water}}{\text{number of atoms of iodine-131 in 1.0 kg of contaminated water}}.$$

ratio = ... [2]

(c) An acceptable limit for the activity of iodine-131 in water has been set as 170 $Bq\,kg^{-1}$.

Calculate the time, in days, for the activity of the contaminated water to be reduced to this acceptable level.

time = ... days [3]

Section B

Answer **all** the questions in the spaces provided.

10 **(a)** State the function of a comparator circuit incorporating an operational amplifier (op-amp).

.....

.....

.....

..... [3]

(b) An ideal op-amp is incorporated into the circuit of Fig. 10.1.

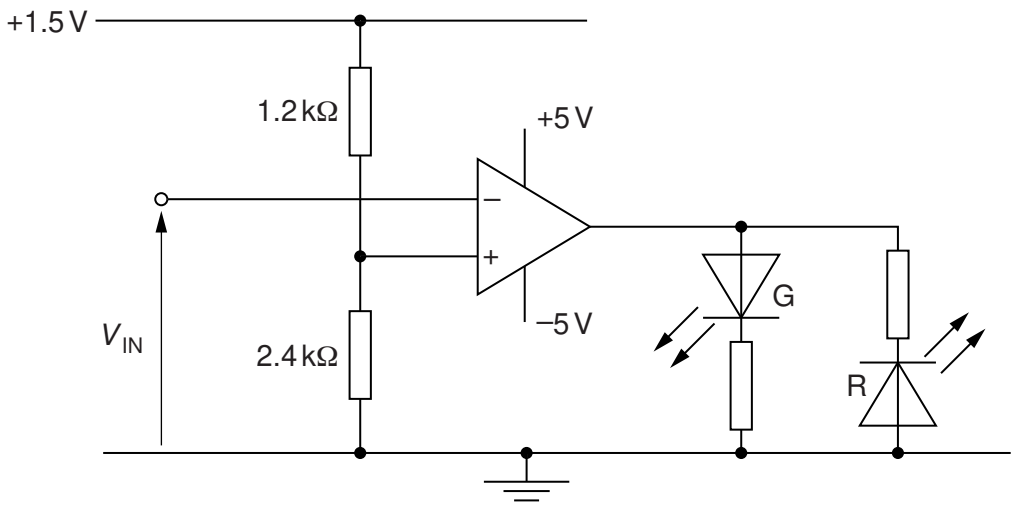

Fig. 10.1

(i) On Fig. 10.1, draw a circle around the part of the circuit that is being used as an output device. [1]

(ii) Show that the potential at the non-inverting input of the op-amp is 1.0 V.

[1]

(iii) The variation with time t of the potential V_{IN} at the inverting input of the op-amp is shown in Fig. 10.2.

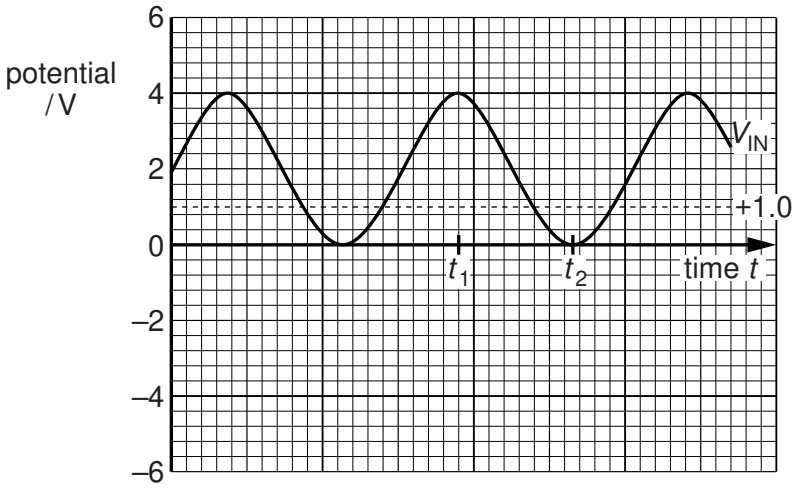

Fig. 10.2

1. On the axes of Fig. 10.2, draw the variation with time t of the output potential of the op-amp. [3]

2. State whether each diode is emitting light or is not emitting light at time t_1 and at time t_2.

At time t_1, diode R will ..... and diode G will ..... .

At time t_2, diode R will ..... and diode G will ..... . [2]

11 **(a)** Distinguish between an X-ray image of a body structure and a CT scan.

X-ray image: .....

.....

.....

.....

.....

CT scan: .....

.....

.....

.....

.....

[5]

(b) Data for the linear absorption (attenuation) coefficient μ of X-ray radiation of energy 80 keV are given in Fig. 11.1.

metal	μ / mm^{-1}
aluminium	0.46
copper	0.69

Fig. 11.1

A parallel X-ray beam is incident on a copper filter, as shown in Fig. 11.2.

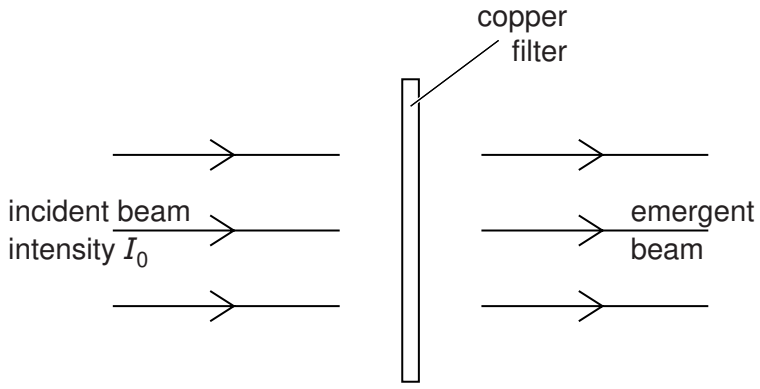

Fig. 11.2

The intensity of the incident beam is I_0.

(i) Calculate the thickness of copper required to reduce the intensity of the emergent beam to $0.25\,I_0$.

thickness = ... mm [2]

(ii) An aluminium filter of thickness 2.4 mm is now placed in the X-ray beam, together with the copper filter in **(i)**.

Calculate the fraction of the incident intensity that emerges after passing through the two filters.

fraction = ... [2]

(iii) Express your answer in **(ii)** as a gain in decibels (dB).

gain = ... dB [3]

12 Two people, living in different regions of the Earth, communicate either using a link provided by a geostationary satellite or using optic fibres.

(a) (i) Explain what is meant by a *geostationary* satellite.

.....

.....

.....

.....

..... [3]

(ii) The uplink frequency for communication with the satellite is 6 GHz and the downlink has a frequency of 4 GHz.

Explain why the frequencies are different.

.....

.....

.....

..... [2]

(b) Comment on the time delays experienced by the two people when communicating either using geostationary satellites or using optic fibres. Explain your answer.

.....

.....

.....

.....

..... [3]

BLANK PAGE

BLANK PAGE

Permission to reproduce items where third-party owned material protected by copyright is included has been sought and cleared where possible. Every reasonable effort has been made by the publisher (UCLES) to trace copyright holders, but if any items requiring clearance have unwittingly been included, the publisher will be pleased to make amends at the earliest possible opportunity.

Cambridge International Examinations is part of the Cambridge Assessment Group. Cambridge Assessment is the brand name of University of Cambridge Local Examinations Syndicate (UCLES), which is itself a department of the University of Cambridge.

© UCLES 2014